1:60 scale

H type

HEINKEL HE-111H

Instructions downloaded separately!

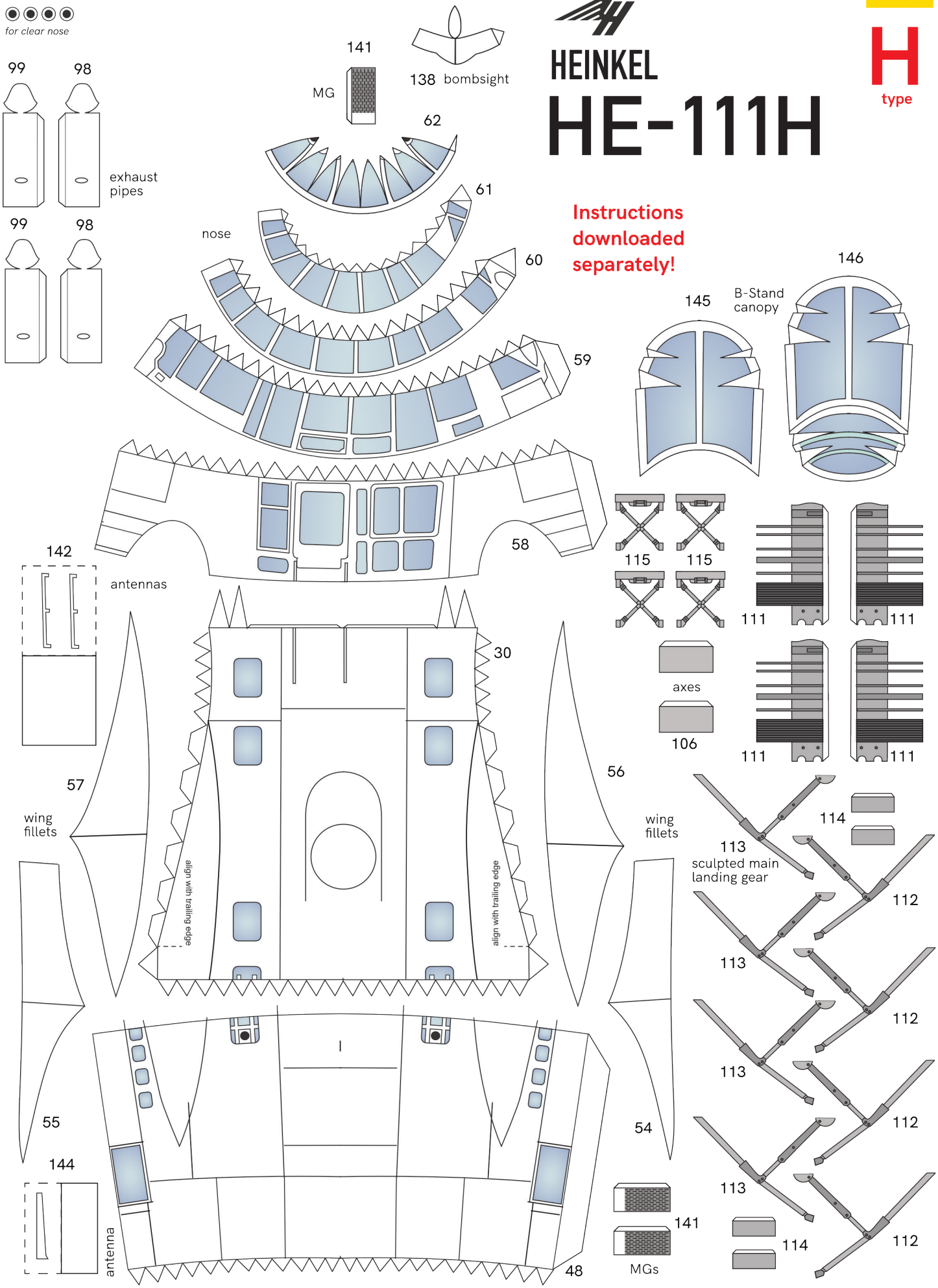

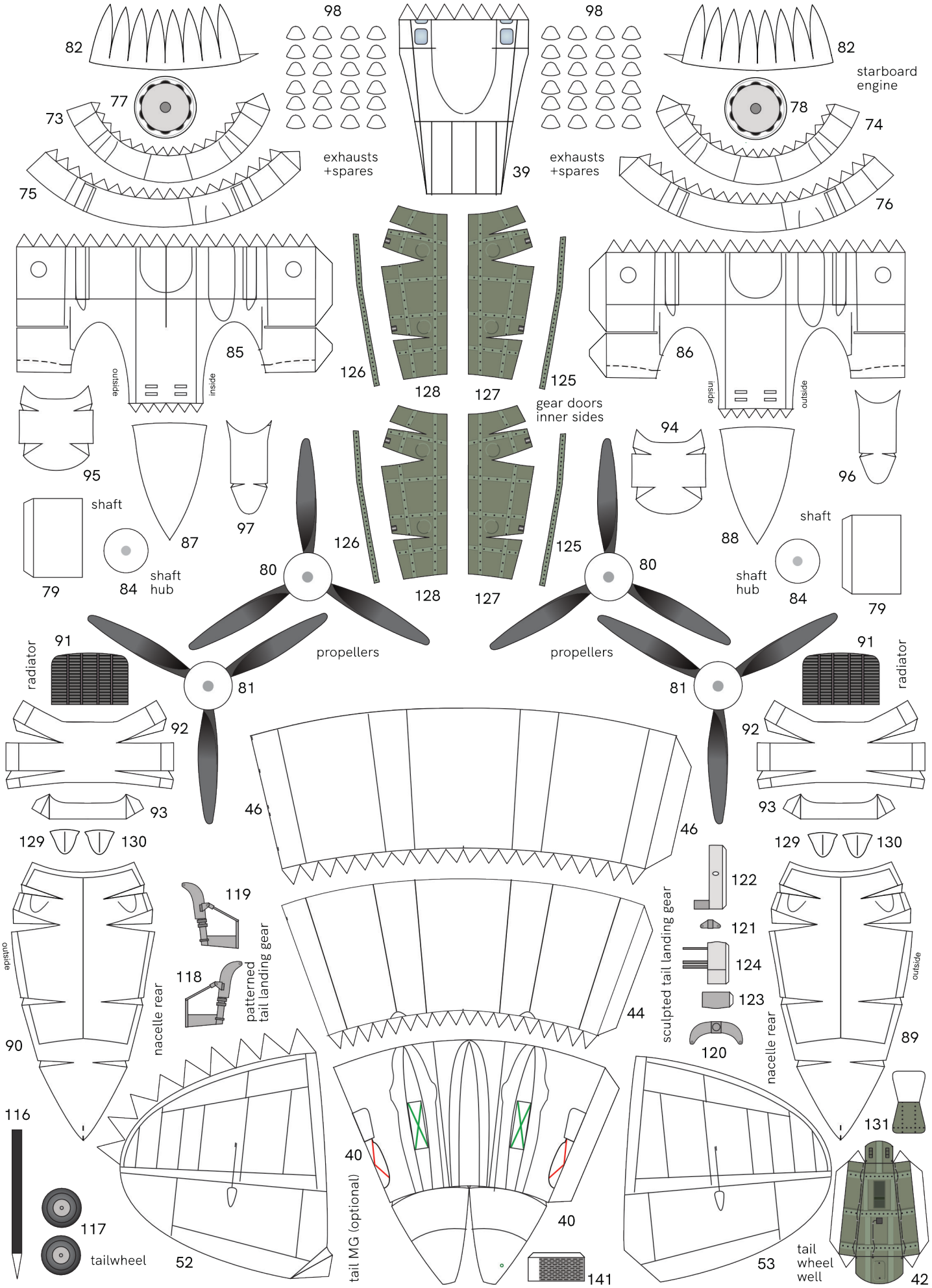
82
98
98
82
starboard engine
77
78
73
74
exhausts +spares
39
exhausts +spares
75
76
85
86
outside
inside
inside
outside
126
128
127
125
gear doors inner sides
95
94
96
97
87
88
shaft
shaft
79
84
shaft hub
shaft hub
84
79
80
80
126
128
127
125
91
91
radiator
radiator
propellers
propellers
81
81
92
92
93
93
46
46
129
130
129
130
122
121
124
123
120
119
118
patterned tail landing gear
sculpted tail landing gear
44
outside
outside
nacelle rear
nacelle rear
90
89
116
131
40
40
117
tailwheel
52
tail MG (optional)
141
53
tail wheel well
42

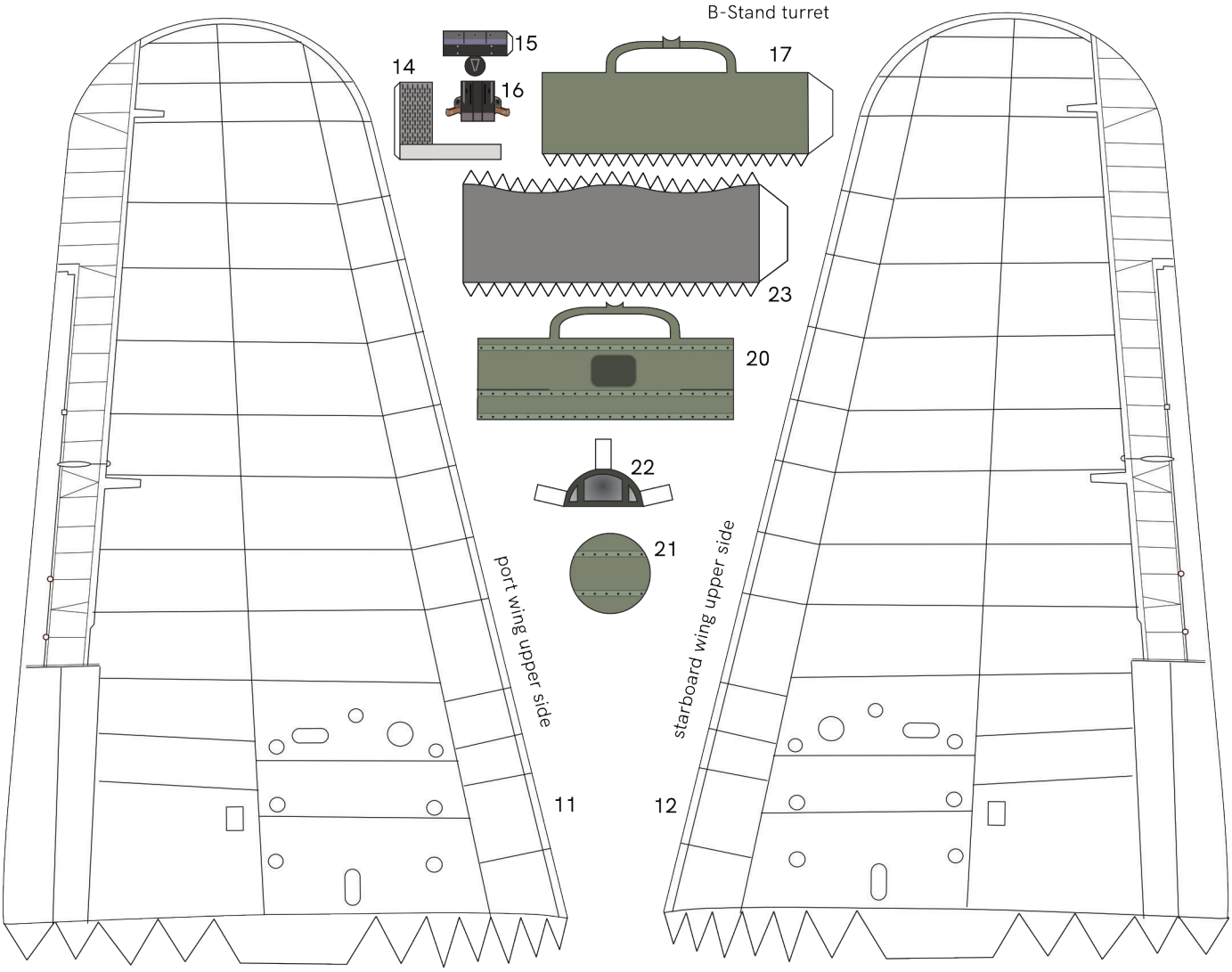
B-Stand turret
15
14
16
17
23
20
22
21
port wing upper side
starboard wing upper side
11
12

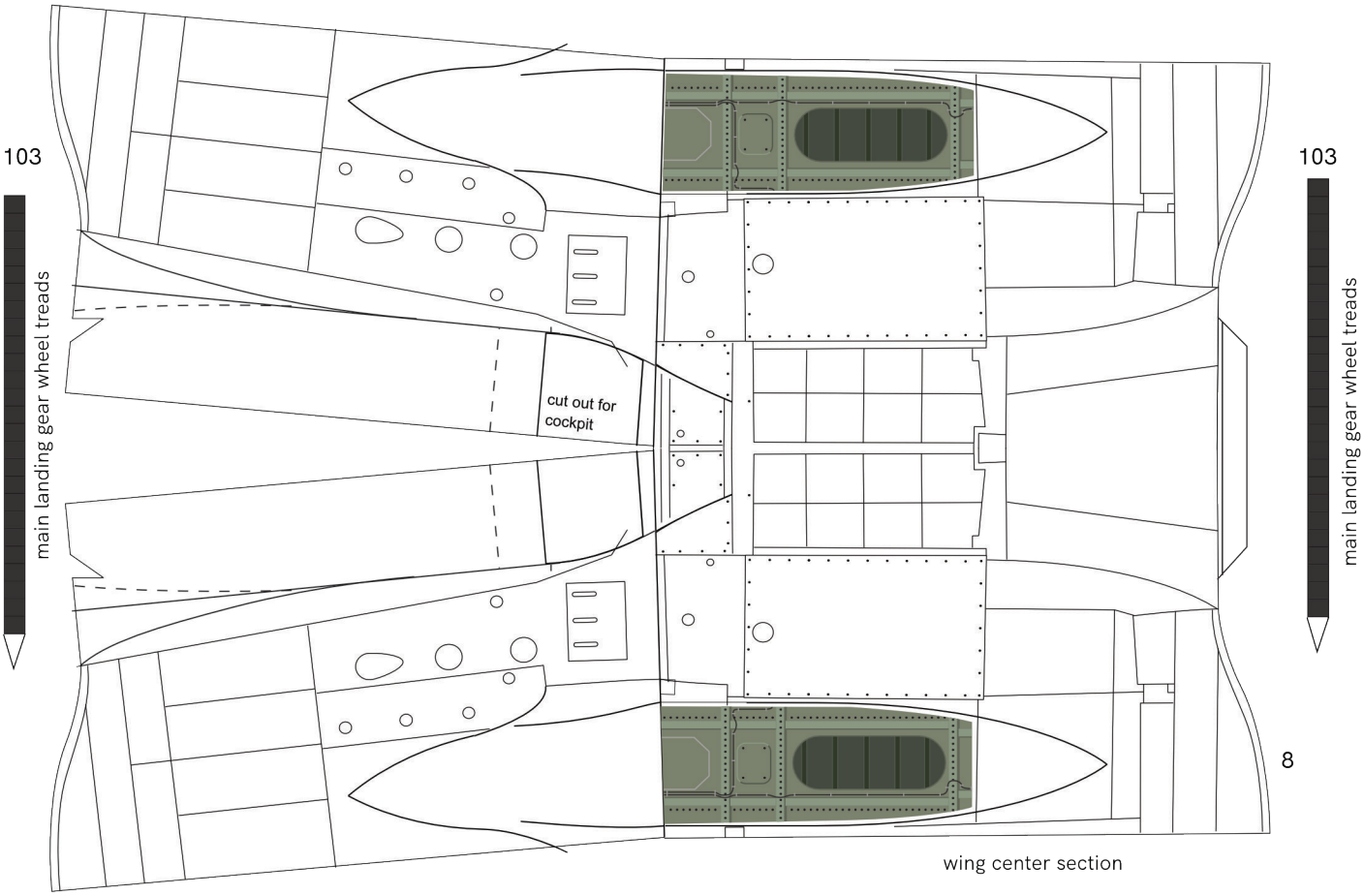
103
103
main landing gear wheel treads
main landing gear wheel treads
cut out for cockpit
8
wing center section

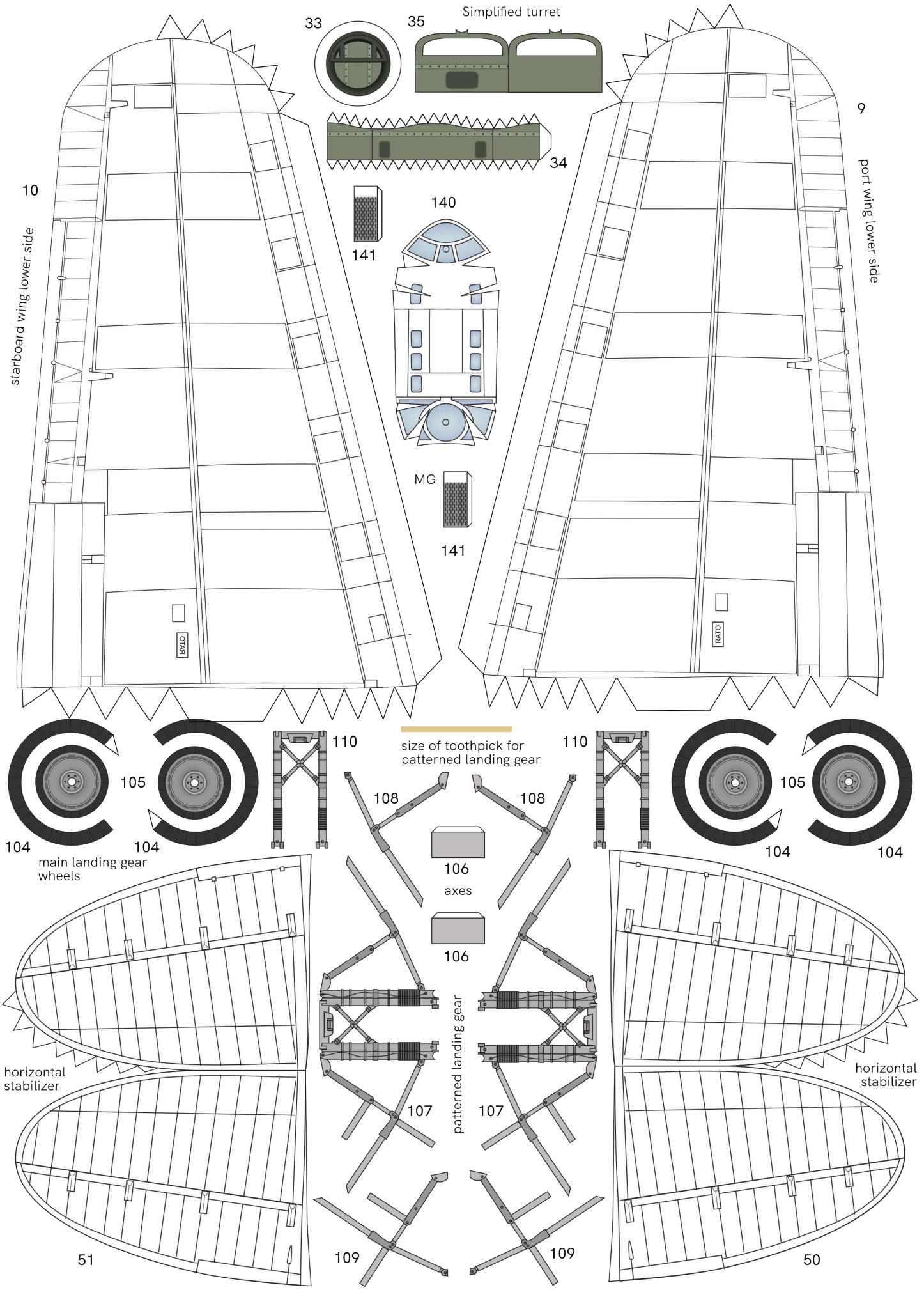
33
35
Simplified turret
34
9
10
starboard wing lower side
port wing lower side
140
141
MG
141
OTAB
RATO
110
105
104
104
main landing gear wheels
size of toothpick for patterned landing gear
108
108
106
axes
106
horizontal stabilizer
107
patterned landing gear
107
horizontal stabilizer
51
109
109
50

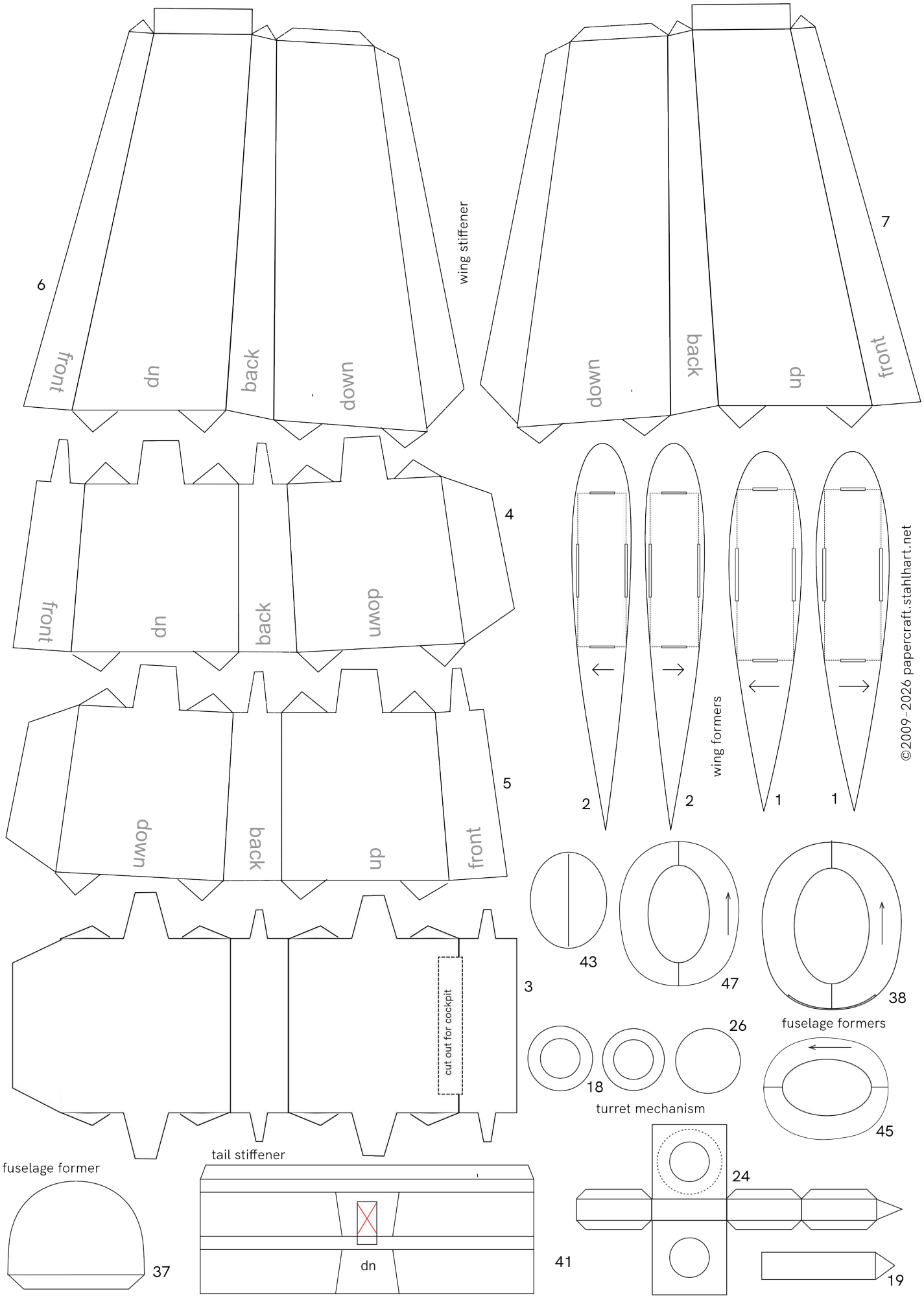

©2009-2026 papercraft.stahlhart.net

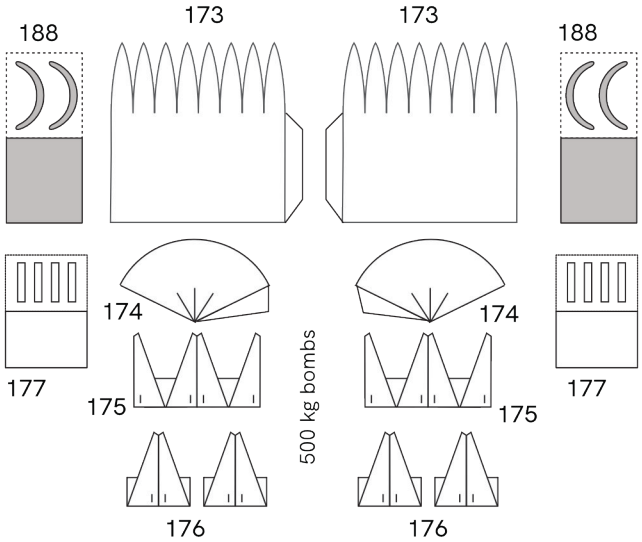

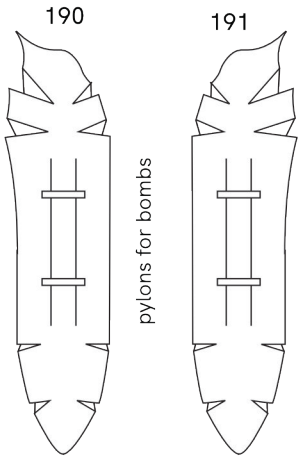

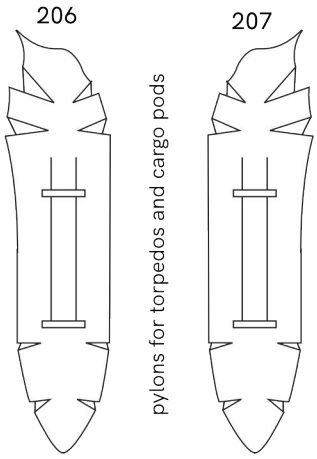

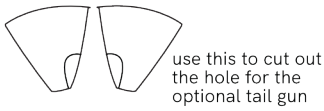

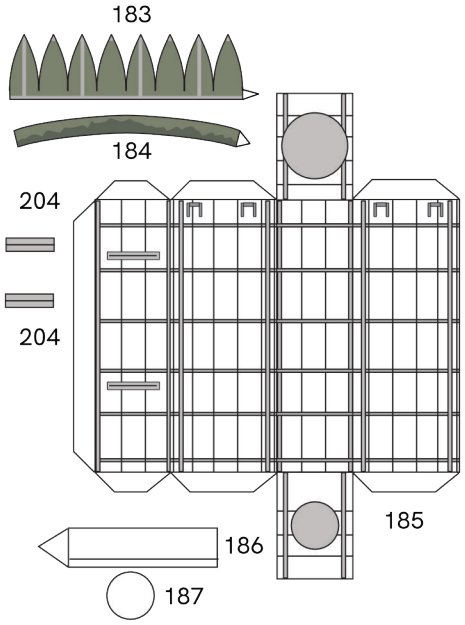

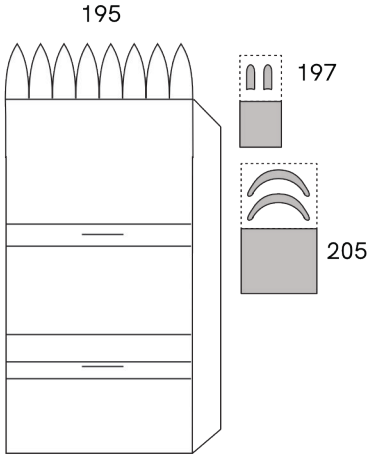

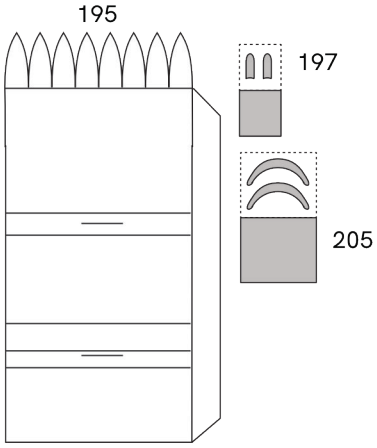

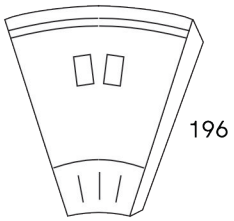

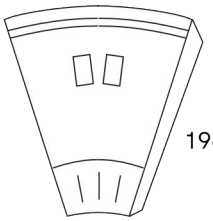

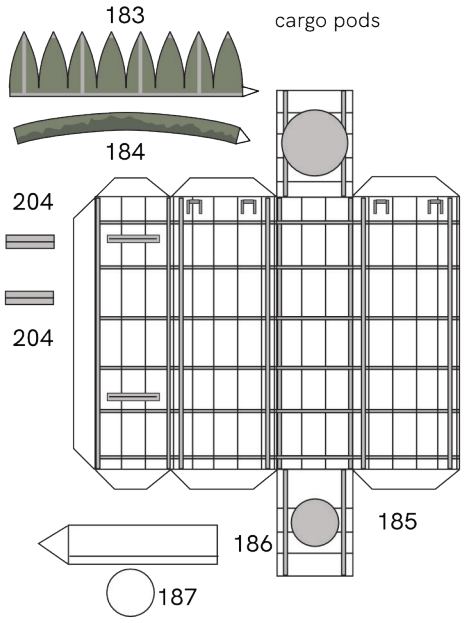

cargo pods

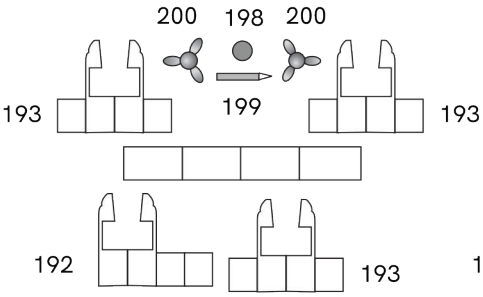

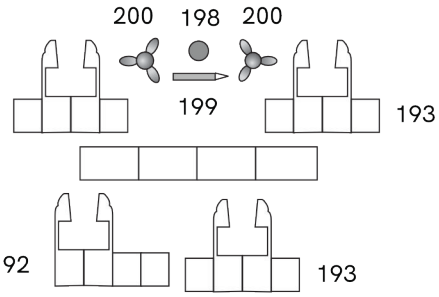

simplified torpedo tail

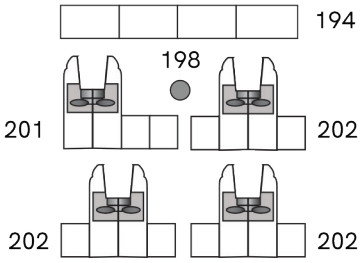
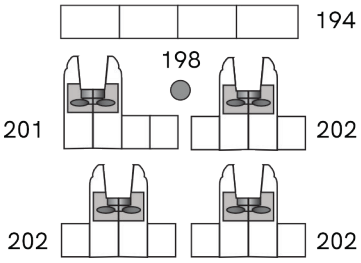
simplified torpedo tail